Product Description

Line : Best

Type : Sponge Dish Metal

Code : 15733

Technical Sheet

Finishing : Chrome

Metal : Brass

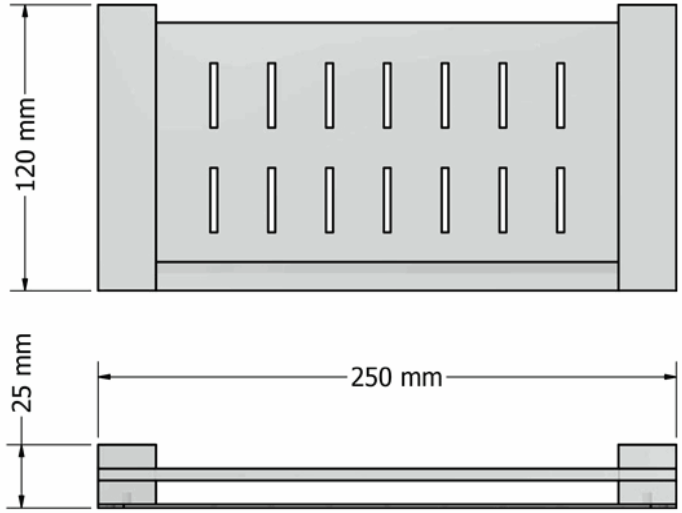

KATSIERIS BROS S.A.
Industry Bathroom accessories, Design & Manufacturing, Koropi Industrial Region, Loc: Poka 194 00, Koropi P.O. 27. Athens-Greece T:+30 210 6627 500, F:+30 210 6626 830
info@sanco.gr, www.sanco.gr

Quality Management System EAOT EN ISO 9001:2008 Cert. No 1008/Δ/2010
Environmental Management System EAOT EN ISO 14001:2004 Cert. No 144/Π/2010