Product Description

Line: Allegory

Type: Glass Holder wall Mounted

Code: 25601

Metal: Brass

Product Photo

Technical Sheet

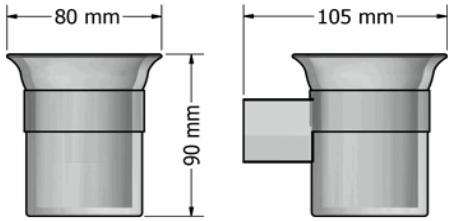

Mounting Instructions

1

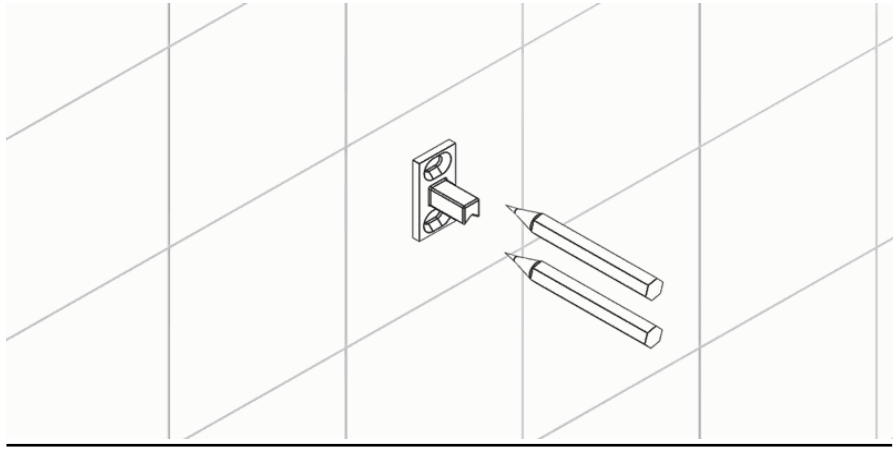

2

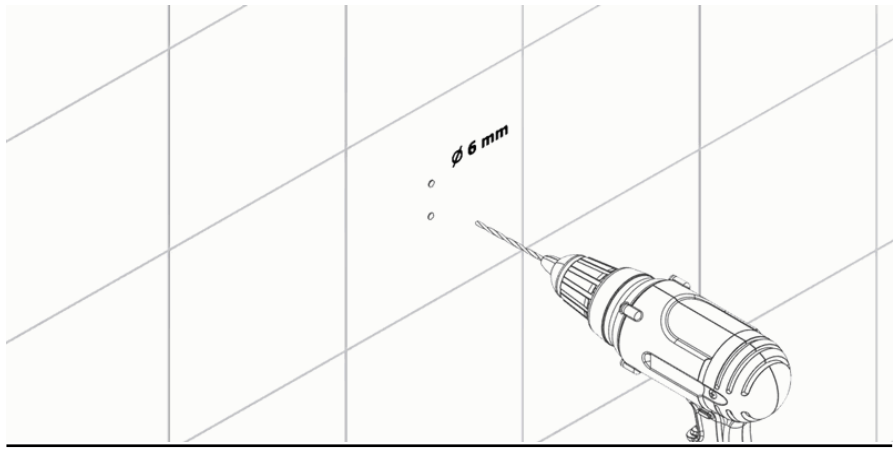

3

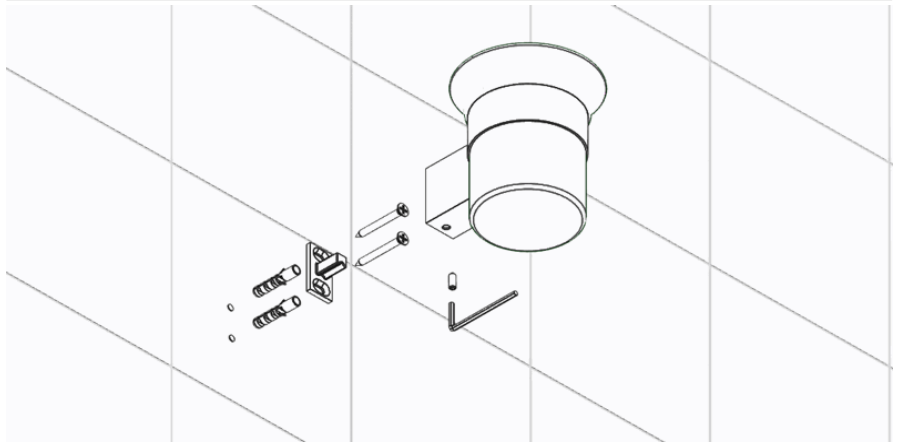

sanco
bathroom theory

Koropi Industrial Region
Loc: Poka 194 00, Koropi P.O. 27,
Athens-Greece

tel.: +30 210 6627500
fax : +30 210 6626830
www.sanco.gr - info@sanco.gr

12 YEARS GUARANTEE

EURO CERT

EURO CERT

We guarrantee the products are made in our factory in Greece