GABOLI FRATELLI
RUBINETTERIA

Cookie |

Article 3501

Basin mixer without pop-up waste

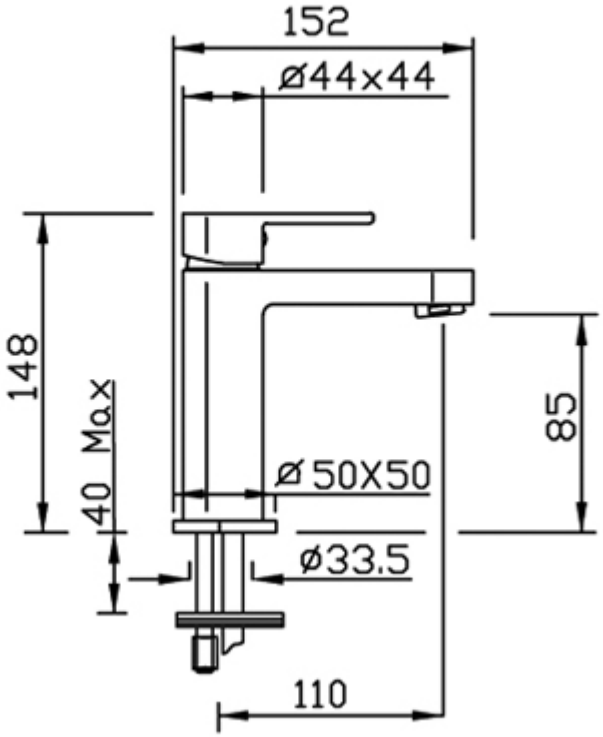

Rubinetterie Gaboli Fratelli - Via Don Minzoni, 47 28024 Gozzano (NO)
Tel +39 0322 94841 Fax: +39 0322 913761 - Email: info@gaboli.it - P.IVA: 00197800030